3p·plast
PLASTIC POLYMERS PERFORMANCES

Kappax

The most innovative system for creating ventilated air spaces ■

5
9
13
15
20
25
27
30
35
40
45
50
55
60
65
70

The use of KAPPAX prevents the build-up of Radon gas: a natural but harmful radioactive gas, and a known carcinogenic

Why choose KAPPAX?

Radon

Radon is an extremely volatile odour-less and colour-less natural radioactive gas.
It is formed as a result of the radioactive decay of natural uranium, and contaminates the ground (in particular lava, tuff, pozzolana), rock and water to some extent, in which it can be dissolved.
It generally enters buildings through cracks and small holes in cellars and other underground areas

Kappax is a new system for creating ventilation spaces as an alternative to gravel and brickwork, a more viable option from a technical and economical point of view for civil, industrial, public buildings and sports centres.
Furthermore, the system is ideal for the distribution of technological systems and plants under tile.

The use of the *Kappax* system in infrastructures lets you cast monolithic foundations in one go, to create a solid structure with notable savings in terms of concrete.
Monolithic ventilated foundations are very stable and lightweight, reducing the weight bearing on the ground and the mass on which a seismic event will act.

Ventilation spaces created with *Kappax* formworks are particularly effective to:

- prevent the build-up of rising damp, thanks to the ventilation spaces, with the air ducted outside the building.
- prevent the build-up of Radon gas in places with scarce ventilation in contact with the ground; Radon is harmful and known to be the second cause of lung cancer.
- favour natural thermo-regulation thanks to the air space which, in contact with the ground, has a higher temperature than the surrounding atmosphere in winter and a lower temperature than the same in summer.

In brief

- Easy installation thanks to the lightweight and simple coupling elements
- Fast to install compared to traditional systems with consequent savings in terms of time
- Structure suitable for foot traffic in the installation phase
- Plants and systems can easily be laid under tile in all directions
- Ventilation spaces, to eliminate rising damp and Radon gas
- Guaranteed more homogeneous load-bearing distribution, preventing the concentration of loads which can lead to structural damage and cracking

Why choose MULTIKAPPAX?

One advantage with *MULTIKAPPAX H5* is that it can be used where you only have a minimum available depth. Installation on site is easy thanks to the coupling system, and it can also be installed on only partially prepared surfaces.

The ultimate expression of this product is as an alternative to floating floors for the distribution of technological plants and systems (electrical lines, waterworks, data connections, etc.) and for ventilated roofs.

The shape and structure is fundamental, not only to support the weight of the screed or pantile, but to provide suitable thermal and acoustic insulation.

Applications

RENOVATION WORK	*MULTIKAPPAX H5* is ideal in these situations thanks to its particular honeycomb structure and reduced height.
INSULATION	*MULTIKAPPAX H5* is highly recommended for the insulation of floors to be finished with wood or carpet, known to be prone to the problems of humidity, condensate and mould.
LIGHTENING	*MULTIKAPPAX H5* lets you reduce the weight of the floor.

Ventilated Roofs

MULTIKAPPAX H5 has also been designed for under tile ventilation, improving living comfort and increasing the life of the covering.
Using *MULTIKAPPAX H5* in ventilated roofs:

- Reduces heat transmission and thermal shock both internally and externally, keeping the attic cooler in summer and warmer in winter.
- Eliminates humidity between the tiles and the waterproofing membrane.
- Prevents the formation of condensate, which can reduce the life of the pantile, and penetrate into the ceiling.
- Reduces outdoor environmental noise and noise from meteorological events.
- Lightens the covering, a favourable factor in the case of wooden roofs.

Installation

One particular characteristic of *MULTIKAPPAX* is how simple it is to install, thanks to the coupling system: once two elements have been connected, they form a stable platform suitable for foot traffic on which you can cast concrete.

- Casting the lean concrete (when renovating the foundations, *MULTIKAPPAX H5* can be used as the floor or screed).
- Installation of *MULTIKAPPAX H5*.
- Installation of distribution plants and systems.
- Laying arc-welded mesh.
- Casting concrete slab.
- Installation of thermal-acoustic insulation layer, if required.
- Casting concrete topping.
- Laying the flooring.

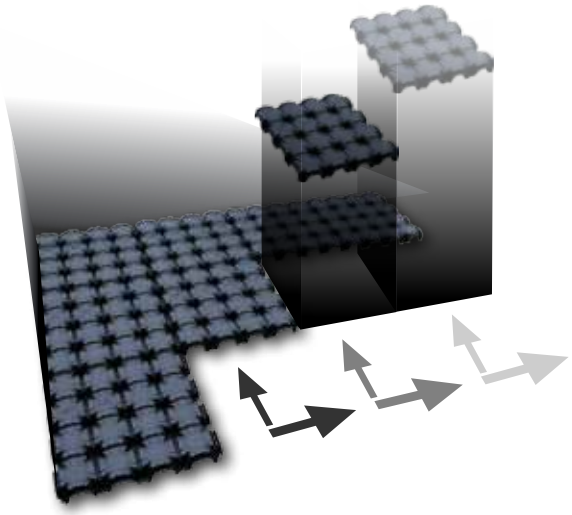

The easy installation of the elements means a reduction of almost 80% in terms of labour.

Ventilation

In order to obtain an effective ventilation of the foundations, the air space must be connected to the outdoor environment: this is done by installing PVC pipes with a diameter of 80/120 mm in the perimeter foundations every 2.00/3.00 m roughly.

If there are several separate sections of the ventilation spaces, separated for example by stringcourses, these sections must be connected together to guarantee the free circulation of the air.

INSTALLATION METHOD:

- PREPARE GROUND
- CAST LEAN CONCRETE LAYER
- PREPARE PERIMETER FORMWORKS
- INSTALL INLET AND OUTLET PIPES
- POSITION DISTRIBUTION DUCTS
- POSITION KAPPAX FROM LEFT TO RIGHT AND FROM THE TOP DOWN
- INSTALL ELLEX FERMAGETTO CASTING SIDE MODULE (if required)
- LAY ARC-WELDED MESH
- CAST SLAB AND PERIMITER BEAMS
- LAY MEMBRANE
- INSTALL THERMAL INSULATION
- CAST MORTAR SCREED
- INSTALL FLOORING

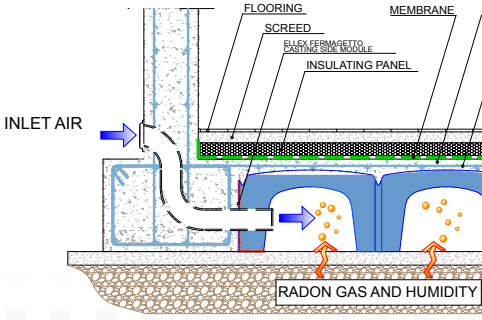

Installation

One particular characteristic of *Kappax* is how simple it is to install, thanks to the coupling system: once two elements have been connected they form a stable platform suitable for foot traffic on which you can lay the reinforcement and cast the concrete.

The shape and structure is fundamental, not only to support the weight of the screed or the floor also for considerable thicknesses (15-20 cm), but also to install small diameter pipes and plant engineering in general.

N.B.

- WE RECOMMEND POSITIONING THE INLET AND OUTLET PIPES AT DIFFERENT HEIGHTS TO INCREASE THE AIRFLOW AS A RESULT OF THE "FLUE" EFFECT.
- INSTALL THE PIPES IN A NORTH-SOOUTH DIRECTION IF POSSIBLE, OR IN ANY CASE ON THE TWO MOST VENTILATED OPPOSITE SIDES.
- USE PVC INLET AND OUTLET PIPES WITH A MINIMUM DIAMETER OF 110 mm EVERY 2-3 m.
- IF PIPES OF A LARGER DIAMETER ARE USED, THEY CAN BE INSTALLED FURTHER APART.

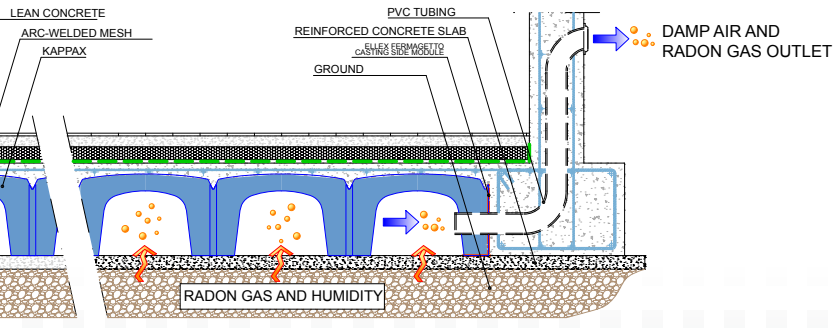

The World Health Organisation classified Radon in Group 1 of the list of the 75 substances known today to be harmful carcinogenic agents.

- Prepare the ground
- Cast the installation bed with lean concrete to the thickness necessary for the load-bearing capacity of the ground, leaving the reinforcement of the beams visible
- Prepare the perimeter formworks for containing the cast concrete
- Prepare the perimeter ventilation pipes and ventilation holes
- Position any other ducts for the distribution of electrical lines, waterworks, IT cables, etc.
- Position the *Kappax* formworks in the order indicated by the arrows stamped on the top of the same. (Proceed with the installation from left to right and from the top down, without producing waste or cutting the *Kappax* formworks)
- Position the mesh directly over the *Kappax* or tie to the reinforcement of the foundation beams
- Cast the concrete in one go between the beams and the slab

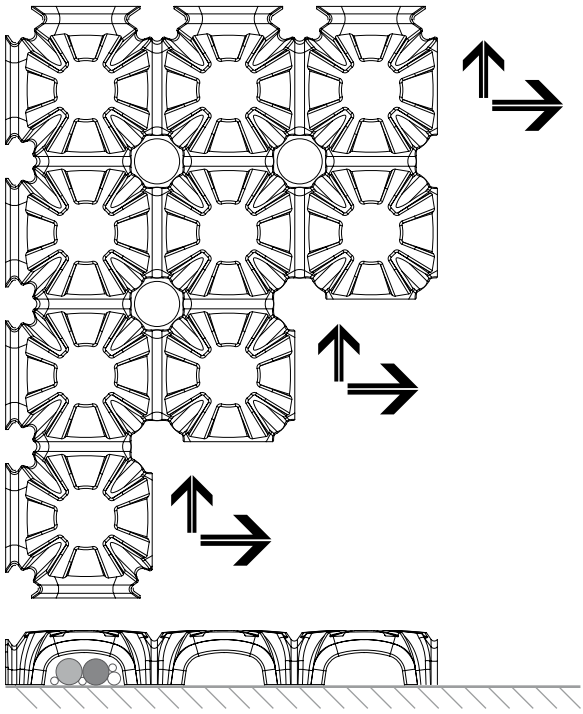

As soon as the arc-welded mesh is in position, the formworks can be walked on; if there is no mesh, only walk on the formworks near pilasters.

- Check you have positioned the *Kappax* formworks and the arc-welded mesh correctly before casting the concrete.

To cast the slab correctly, we recommend first filling the zone of the pilasters, and then casting the concrete on the remaining parts, making sure you keep the pump at least 20 cm away from the top of the formworks to avoid excessive stress on the dome.

In hot weather (>30°C) cast the concrete in the coolest hours, or dampen the formworks well before casting.

Pre-dimensioning table

Maximum pressure on the ground

Load distributed on the basis of the type of lean concrete

SLAB THICKNESS in mm (Rck≥30 N/mm²)

Welded mesh. (steel B450C)	40	50	60	70	80	90	100	120	150	180	200
ϕ 5-150X150	28	36	43	52	60	67	76	91	115	139	155
ϕ 6-200X200		38	47	55	64	73	81	99	124	150	168
ϕ 6-150X100		50	62	73	85	97	108	131	166	201	224
ϕ 5-100X100	40	53	65	77	89	101	113	137	173	209	234
ϕ 8-200X200			73	88	98	111	124	150	189	227	242
ϕ 6-100X100		56	73	90	101	112	125	151	190	229	242
ϕ 8-150X150			73	90	106	115	124	150	189	227	242
ϕ 10-200X200			73	90	110	121	131	149	188	226	242
ϕ 8-100X100			73	90	110	131	142	161	189	227	242
ϕ 12-200X200					110	131	146	165	193	225	242

MAXIMUM LOAD in kN/m² (characteristic load combination)

ultimate limit state in bending
shear load
ultimate compressive strength of the pilaster
puncture resistance

1 kN/m² =100 kg/m²

The table shows the maximum applicable load, obtained as a result of the sum of the incidental and permanent loads, in relation to the thickness of the upper slab and the type of arc-welded mesh.
The ultimate strength mechanism of the slab is shown in different colours.
In-depth study is required for special load conditions (concentrated loads for example).

The graph shows the curves indicating the trend of the maximum pressure on the ground on the basis of the load distributed on the slab.

On the basis of the value of the load, the thickness and type of lean concrete (reinforced or not) we can obtain the value of the maximum pressure on the ground.

0,1 N/mm² =1 kg/cm²

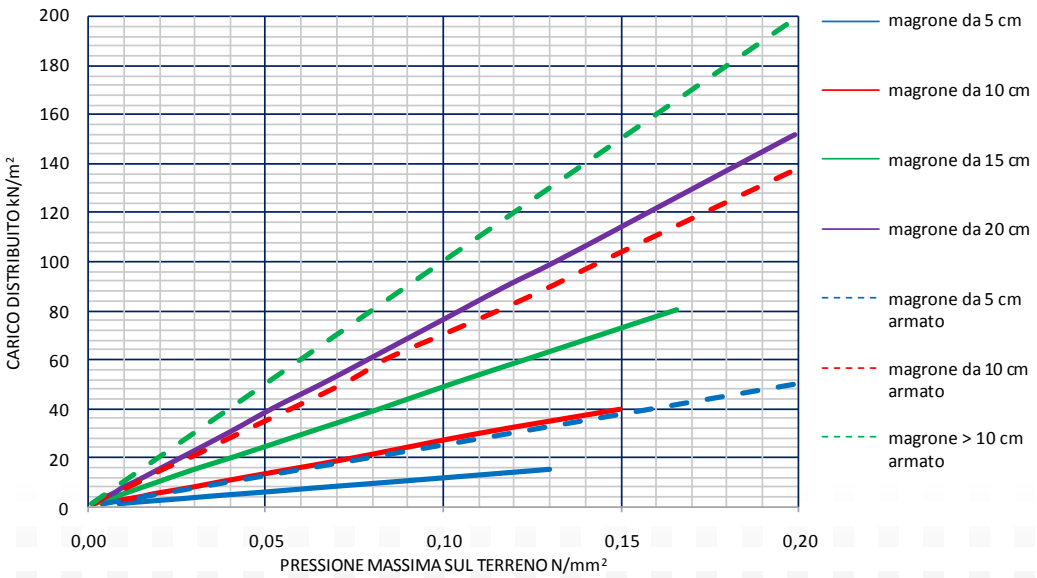

Table of geometrical characteristics

Formworks	H (cm)	Lx (cm)	Ly (cm)	a (cm)	b (cm)	concrete consumption after striking (mc/mq)
KAPPAX H5	5	50	50	3.2	7.6	0.008
KAPPAX H9	9	50	50	4.7	28.2	0.022
KAPPAX H13	13	50	50	8.7	30.3	0.025
KAPPAX H15	15	50	50	8.8	30.7	0.034
KAPPAX H20	20	50	50	13.8	31.9	0.038
KAPPAX H25	25	50	50	18.8	33.1	0.041
KAPPAX H27	27	50	50	20.8	33.6	0.042
KAPPAX H30	30	50	50	23.8	34.3	0.044
KAPPAX H35	35	50	50	28.8	35.5	0.046
KAPPAX H40	40	50	50	33.8	36.7	0.048
KAPPAX H45	45	50	50	38.8	37.9	0.049
KAPPAX H50	50	50	50	43.8	39.1	0.050
DOPPIOKAPPAX H15	15	100	50	8.8	30.7	0.030
DOPPIOKAPPAX H27	27	100	50	20.8	33.6	0.050
DOPPIOKAPPAX H40	40	100	50	33.8	36.7	0.065

MULTIKAPPAX H5

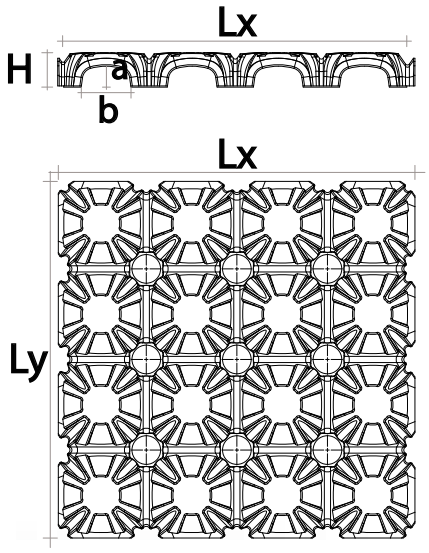

KAPPAX H9 - H50

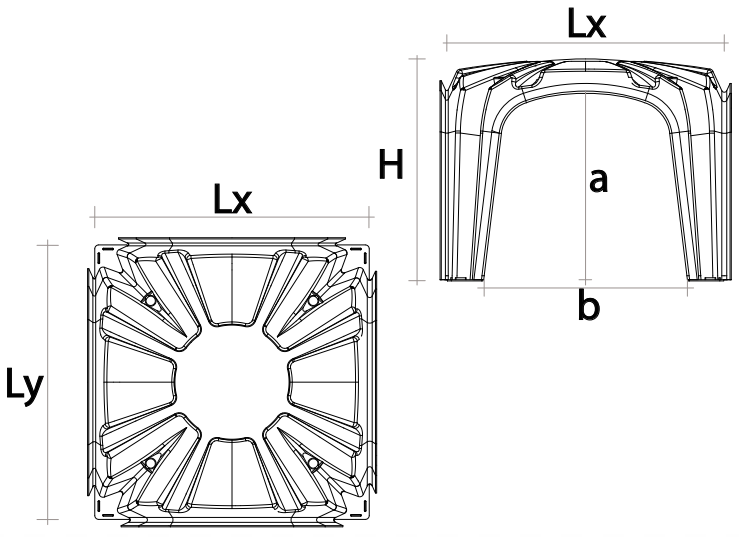

Pre-dimensioning table

SLAB THICKNESS in mm (Rck≥30 N/mm²)

Welded mesh. (steel B450C)	40	50	60	70	80	90	100	120	150	180	200
ϕ 5 -150X150	13	17	21	24	28	32	37	44	55	67	74
ϕ 6-200X200		18	22	26	31	35	39	47	60	72	81
ϕ 6-150X100		24	30	35	41	47	53	63	81	97	108
ϕ 5-100X100	19	26	31	37	43	49	55	67	84	102	114
ϕ 8-200X200			37	46	54	61	69	84	107	129	145
ϕ 6-100X100		28	37	46	56	67	79	95	121	147	164
ϕ 8-150X150			37	46	56	67	79	103	132	159	177
ϕ 10-200X200			37	46	56	67	79	103	131	158	176
ϕ 8-100X100			37	46	56	67	79	103	132	159	177
ϕ 12-200X200					56	67	79	103	135	157	175

MAXIMUM LOAD in kN/m² (characteristic load combination)

ultimate limit state in bending
shear load
puncture resistance

1 kN/m² =100 kg/m²

The table shows the maximum applicable load, obtained as a result of the sum of the incidental and permanent loads, in relation to the thickness of the upper slab and the type of arc-welded mesh.

The ultimate strength mechanism of the slab is shown in different colours.
In-depth study is required for special load conditions (concentrated loads for example).

MAXIMUM PRESSURE ON THE GROUND

Load distributed on the basis of type of lean concrete

Table of geometrical characteristics

The graph shows the curves indicating the trend of the maximum pressure on the ground on the basis of the load distributed on the slab.

On the basis of the value of the load, the thickness and type of lean concrete (reinforced or not) we can obtain the value of the maximum pressure on the ground.

0,1 N/mm² =1 kg/cm²

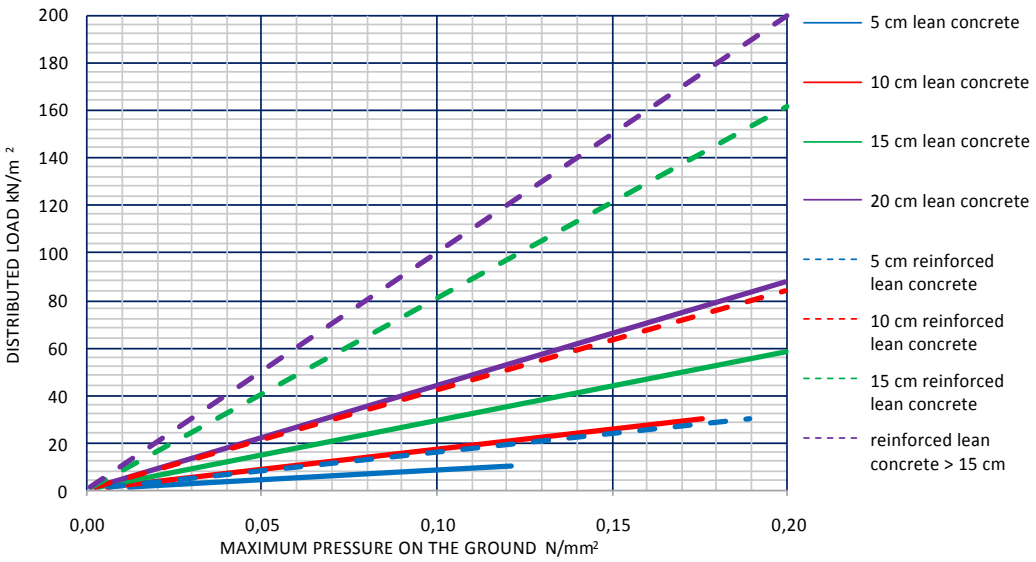

Formworks	H (cm)	Lx (cm)	Ly (cm)	a (cm)	b (cm)	concrete consumption after striking (mc/mq)
KAPPPAX H55	55	71	71	46.3	51.9	0.069
KAPPPAX H60	60	71	71	51.3	53.2	0.071
KAPPPAX H65	65	71	71	56.3	54.4	0.072
KAPPPAX H70	70	71	71	61.3	55.5	0.073

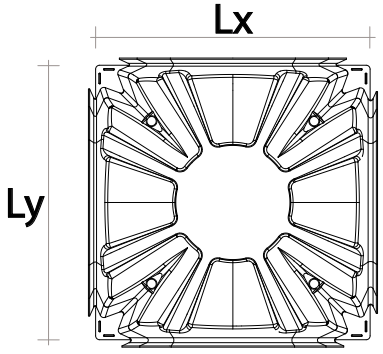

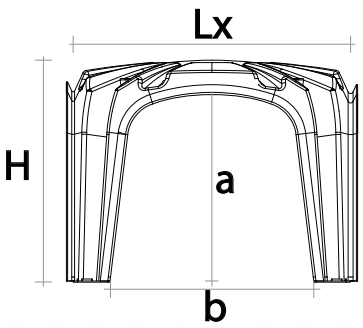

Table of load intervals for the combination at the ultimate limit state

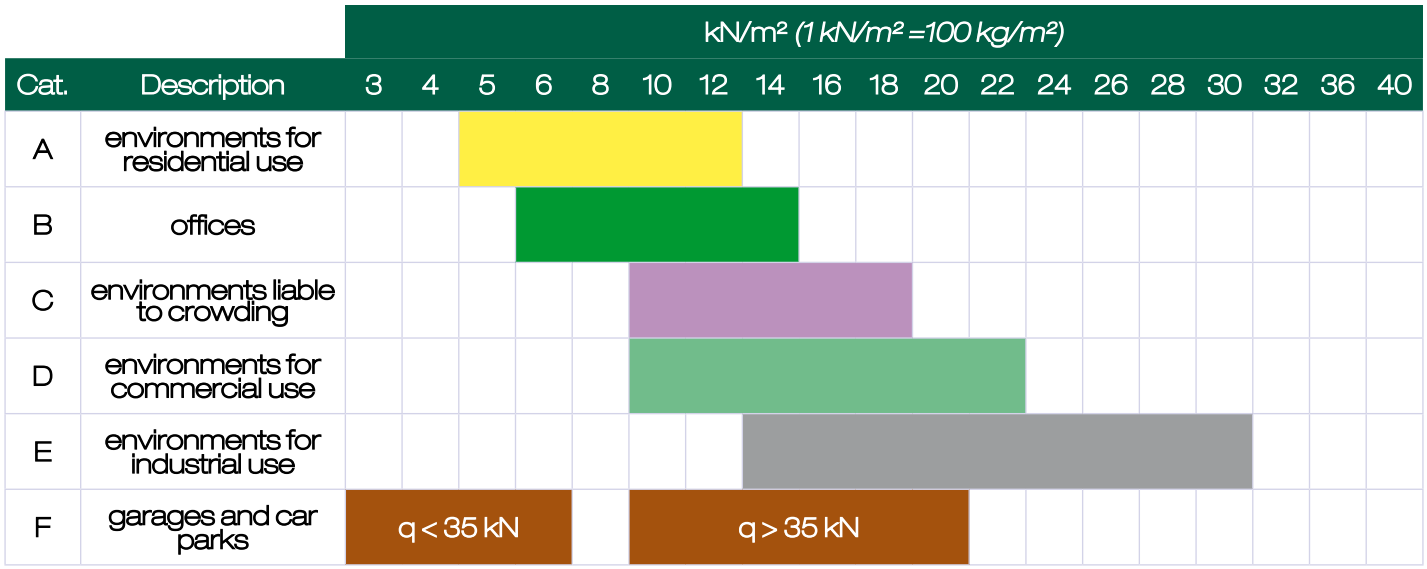

The table shows the load intervals for the rare load combination in some categories of use of the environments (tab. 3.1.2, Italian Ministerial Decree 14/01/08).

Complementary accessories

Coupling ring

The use of the coupling ring is recommended in the installation phase of the larger models: H65 - H70.

ELLEX fermagetto casting side module

The Ellex casting side modules in the perimeter zone around the air space and in the offsets has a twofold function:

- reinforcement formworks for the perimeter beam;
- stops the concrete getting into the ventilation ducts while casting.

Mod. Side module	Mod.KAPPAX
ELLEX H 15/20	M5/H9/H13/H15/H20
ELLEX H 27/30	H25/H27/H30
ELLEX H 35/40	H35/H40
ELLEX H 45/50	H45/H50
ELLEX H 55	H55
ELLEX H 60	H60
ELLEX H 65	H65
ELLEX H 70	H70

TRIPPLEX

Triplex is an adjustable regenerated polypropylene extension. Triplex closes the Kappax element with the following function:

- stops the cast concrete, completely closing off the side module;
- extension up to a maximum length of 35 cm.

Available for Kappax H55 ≥ H70

The advantages of the Triplex system are similar to those of the Kappax System: fast installation, can be walked on when dry, reduces formworks cutting and creates a monolithic structure.

KAPPAX technical and structural specifications

Packaging table

Item	A x B (cm)	pieces/mq	mq/pallet	height
MULPTIKAPPAX H5	50 x 50	4	120	5
KAPPAX H9	50 x 50	4	90	9
KAPPAX H13	50 x 50	4	85	13
KAPPAX H15	50 x 50	4	90	15
KAPPAX H20	50 x 50	4	85	20
KAPPAX H25	50 x 50	4	80	25
KAPPAX H27	50 x 50	4	80	27
KAPPAX H30	50 x 50	4	75	30
KAPPAX H35	50 x 50	4	80	35
KAPPAX H40	50 x 50	4	75	40
KAPPAX H45	50 x 50	4	65	45
KAPPAX H50	50 x 50	4	60	50
KAPPAX H55	71 x 71	2	100/50	55
KAPPAX H60	71 x 71	2	100/50	60
KAPPAX H65	71 x 71	2	100/50	65
KAPPAX H70	71 x 71	2	100/50	70
DOPPIOKAPPAX H15	100 x 50	2	80	15
DOPPIOKAPPAX H27	100 x 50	2	65	27
DOPPIOKAPPAX H40	100 x 50	2	45	40

Kappax

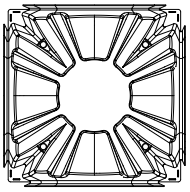

Doppiokappax

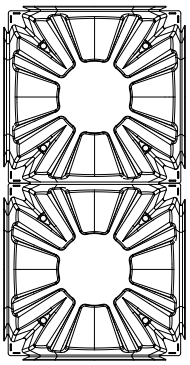

- *Concrete topping or structural screed*: concrete slab, suitably reinforced, cast over the extrados of the weight-reduction element with a structural function.
- *Incidental load (Qk)*: loads acting of an element which may vary in time. Table 3.1.2 of Italian Ministerial Decree 14/01/08 indicates the relevant value which also includes dynamic effects, on the basis of the category of use of the environments.
- *Permanent load (Gk)*: loads acting on an element which do not change in time. Permanent loads are loads that cannot be removed during the life of a building, such as screeds, floors, insulation, plants and systems, machines and the weight of the structural elements.
- *Formworks*: system of enclosures within which the fluid concrete is cast and left to set. The formworks are removed after the concrete has started to set, when the concrete has a mechanical resistance sufficient to guarantee the absorption of the stress for which the structure is designed; formworks may be made of wood, polystyrene, plastic and metal.
- *Characteristic load combination*: combination of loads acting on a structure (permanent incidental) with coefficients of amplification equal to 1, used to verify the structural elements; also called rare combination (fr = Gk+Qk).
- *Ultimate load combination*: combination of loads acting on a structure (permanent and incidental) with amplification coefficients that allow for variability in calculating the characteristic of the loads, used to verify the structural elements at the ultimate limit state. In general an amplification coefficient of 1.3 is used for permanent loads and 1.5 for incidental loads (fu = 1.3Gk+1.5Qk).
- *Compression*: elementary force or stress to which a body may be subject, characterised by the normal force at the transversal section of the element.
- *Concrete consumption after striking*: volume of concrete per m2 of floor used to fill the formworks to the top edge of the same.
- *Pantile*: a type of tile, usually brick.
- *Stringcourse*: element of construction on each floor along the edge of the slabs to separate the floor and the brickwork above and below. The stringcourse distributes the load of the brickwork above, but connects the walls, to stop them opening up under stress. The stringcourse is usually made of reinforced concrete with longitudinal steel rods and brackets.
- *Bending*: elementary stress to which a body can be subject due to the effect of its limits, as it reacts, resisting a system of forces applied to the same which tend to make it bend; the result is traction and compression on the element.

Technical Glossary

- *Lean concrete*: concrete made with a limited quantity of cement (less than 150 Kg/m3), and an aggregate grading curve with quite considerable dimensions. The lean concrete is used as a foundation bed to create a clean, horizontal layer for the foundations, and to distribute the load over a larger area, reducing ground tension. Another important function of the lean concrete is to keep the foundations off the ground, preventing contact with damp earth and the risks of corrosion in the reinforcement.
- *Screed*: horizontal element of construction used to level the surfaces where the floor will be installed; the thickness is variable according to the type of environment and pipes and cables can be laid in the same.
- *Floating floor*: a raised floor that isn't fixed to the supporting structure and is installed at a certain height above the extrados of the floor, to obtain a floor with an airspace below (for distribution systems) to contain plants and systems.
- *Pressure on ground*: load in terms of force per unit of area (pressure) bearing on the ground as a result of the weight of the structure.
- *Puncturing*: typical breakage mechanism of plates, caused by a concentrated load (such as an external force on the system or a reaction of load-bearing points), which causes a breakage, shearing the plate around the load.
- *Radon*: carcinogenic radioactive gas, the main source of which is the ground. Radon is released from the ground to be dispersed in the environment. It can reach harmful concentrations in closed rooms.
- *Shear*: elementary stress to which a body may be subject, generating tangential tension in the element that tends to make the sections slide.
- *Ventilated roof*: covering constructed to obtain an upwards airflow from below the final covering; in summer cool air, from under the eaves, is warmed in the air space which has been heated by the sun, the hot air rises and escapes through the ridge, cooling the roof; in winter the air circulation keeps the insulating material dry, preventing condensation and guaranteeing the long life of the constructional elements of the roof. In the case of snow, the ventilated roof helps the snow melt in a uniform manner on the roof, preventing the formation of ice barriers.
- *Ventilation space*: air space in contact with the ground used in constructions to improve the conditions of the living environment.

NOTES

3P Plast was established in 1994 and is specialised in the production of moulded plastic elements such as parts for office chairs, products for the building trade, bins for separate waste collection and grids for reinforcing and protecting grassed surfaces for vehicular applications. 3P Plast obtained EN ISO 9002 certification in 2001.

Thanks to our two factories with an overall area of 30,000 m2, of which 12,000 m2 covered, and twelve injection moulding presses with clamping pressure ranging from 250 to 1,800 tonnes with an injection capacity of up to 20,000 g and a regeneration line, 3P Plast has a production capacity for over 9,000 tones of plastic materials, and produces over eight million articles a year, with a streamlined warehouse service to manage stocks. The company logistics can count on a fleet of 4 vehicles for the distribution of our products.

3P Plast mainly moulds polyethylene (PE), Polypropylene (PP), Nylon (PA) and ABS.

3P Plast's flexibility and experience in moulding plastics means we can create a product that meets the customer's specific requirements, mould plastics for third parties, and also develop joint projects.

UNI EN ISO 9001:2000
CERTIQUALITY
SISTEMA DI GESTIONE QUALITÀ CERTIFICATO

CERTIQUALITY È MEMBRO DELLA FEDERAZIONE CISQ
IQNet

3p·plast
PLASTIC POLYMERS PERFORMANCES

Via Boschi 10
35014 Fontaniva (Pd)

Tel 0039 049 9430691
Fax 0039 049 9430697

Info@3pplast.it
www.3pplast.it